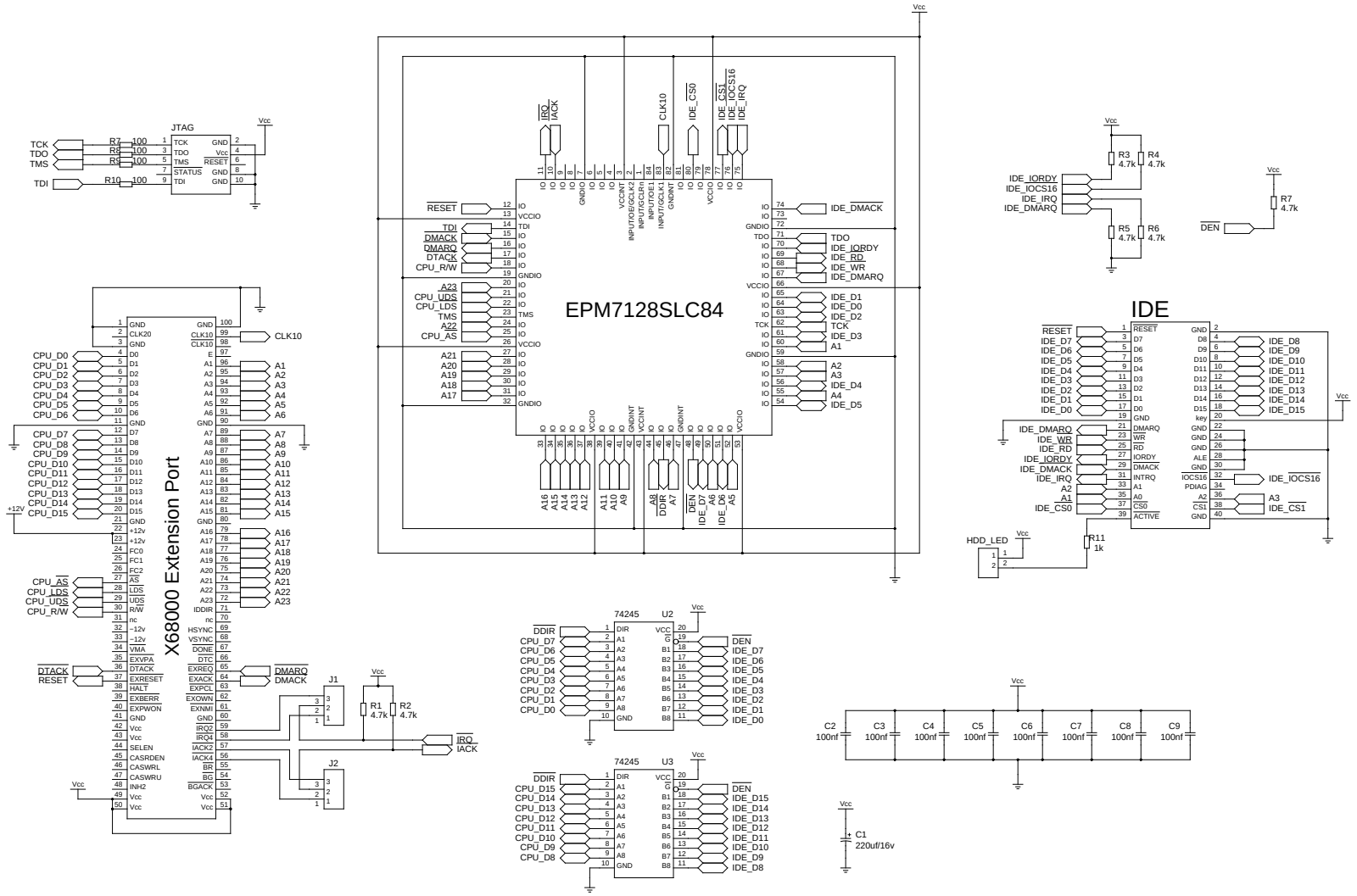

TITLE ERSA PATA Controller for X68000

FILE:

PAGE OF

REVISION: 0.4

DRAWN BY: Lydux